Pressure sensor, Series PE5

- Operating pressure -1 ... 0 -1 ... 1 0 ... 6 0 ... 10 0 ... 12 bar
- electronic
- Output signal analog 0 - 10 V DC, 4 - 20 mA
- Output signal digital 2 x PNP, NPN, Push-pull PNP, NPN, Push-pull PNP, NPN, push-pull, 1x IO-Link
- Electr. connection Plug M12x1 4-pin
- Compressed air connection Internal thread G 1/4

Type	electronic
Certificates	CE declaration of conformity, cULus, RoHS, Conforms with REACH, Free of substances that impair surface wetting in the coating process
Compressed air connection	Internal thread G 1/4
Ambient temperature min./max.	0 ... 60 °C
Medium temperature min./max.	0 ... 60 °C
Medium	Compressed air (max. 40 µm)
Max. oil content of compressed air	40 mg/m³
Measurement	Relative pressure
Display	LCD display, 4 digits, Color setting: green or red
Units displayed	bar psi kPa MPa inHg
Switching logic	NO/NC (adjustable)
Shock resistance max.	30 g
Vibration resistance	5 g (10 - 150 Hz)
Precision (% of full scale value)	±1.5% in temperature range of 10 - 30°C ± 2 % including temperature drift
Repeatability (% of full scale value)	± 0,2 %
Switching time	5 ms
Switching point	adjustable 0 ... 100%
Resetting point	adjustable 0 ... 100%
Hysteresis	adjustable
Delayed hysteresis	adjustable
Window function	adjustable
DC operating voltage min./max.	17 ... 30 V DC
Analog output	0 - 10 V DC, 4 - 20 mA
Quiescent current consumption	40 mA
Analog output linearity	± 0.5% of the final value
Maximum load (analog current output)	600 Ω
Short circuit resistance	Max. 600 ohms (current output) Min. 3K ohms (voltage output)
Mounting types	Directly on hat rail and wall mounting For panel installation using mounting kit via double nipple
Protection class	IP65 IP67 with connections assembled
Electr. connection	Plug M12x1 4-pin
Weight	0,04 kg

Technical data

Part No.		Operating pressure range min./max.	Protection against overpressure
R412010761		-1 ... 0 bar	5 bar
R412010769		-1 ... 0 bar	5 bar
R412010775		-1 ... 0 bar	5 bar
R412010763		-1 ... 1 bar	5 bar
R412010771		0 ... 6 bar	15 bar
R412010765		0 ... 6 bar	15 bar
R412010777		0 ... 6 bar	15 bar
R412010773		0 ... 10 bar	15 bar
R412010767		0 ... 10 bar	15 bar
R412010779		0 ... 10 bar	15 bar
R412010782		0 ... 12 bar	16 bar
R412010806		0 ... 12 bar	16 bar

Part No.	Output signal Analog	Output signal digital	Fig.	
R412010761	-	2 x PNP, NPN, Push-pull	Fig. 1	-
R412010769	0 - 10 V DC-4 ... 20 mA	PNP, NPN, Push-pull	Fig. 1	-
R412010775	-	PNP, NPN, push-pull, 1x IO-Link	Fig. 1	1)
R412010763	-	2 x PNP, NPN, Push-pull	Fig. 1	-
R412010771	0 - 10 V DC-4 ... 20 mA	PNP, NPN, Push-pull	Fig. 1	-
R412010765	-	2 x PNP, NPN, Push-pull	Fig. 1	-
R412010777	-	PNP, NPN, push-pull, 1x IO-Link	Fig. 1	1)
R412010773	0 - 10 V DC-4 ... 20 mA	PNP, NPN, Push-pull	Fig. 1	-
R412010767	-	2 x PNP, NPN, Push-pull	Fig. 1	-
R412010779	-	PNP, NPN, push-pull, 1x IO-Link	Fig. 1	1)
R412010782	-	2 x PNP, NPN, Push-pull	Fig. 1	-
R412010806	-	PNP, NPN, push-pull, 1x IO-Link	Fig. 1	1)

1) The IO-Link device description (IODD) for the PE5 pressure sensor is available for download in the Media Centre.

Technical information

Alternative pressure connection (G1/4) on the rear side (closed with plug)
Display color selectable, red or green

Technical information

Material	
Housing	Polycarbonate
Seals	Acrylonitrile butadiene rubber
Blanking plug	Polyoxymethylene
Electr. connection	Aluminum, black anodized

Dimensions

Fig. 1

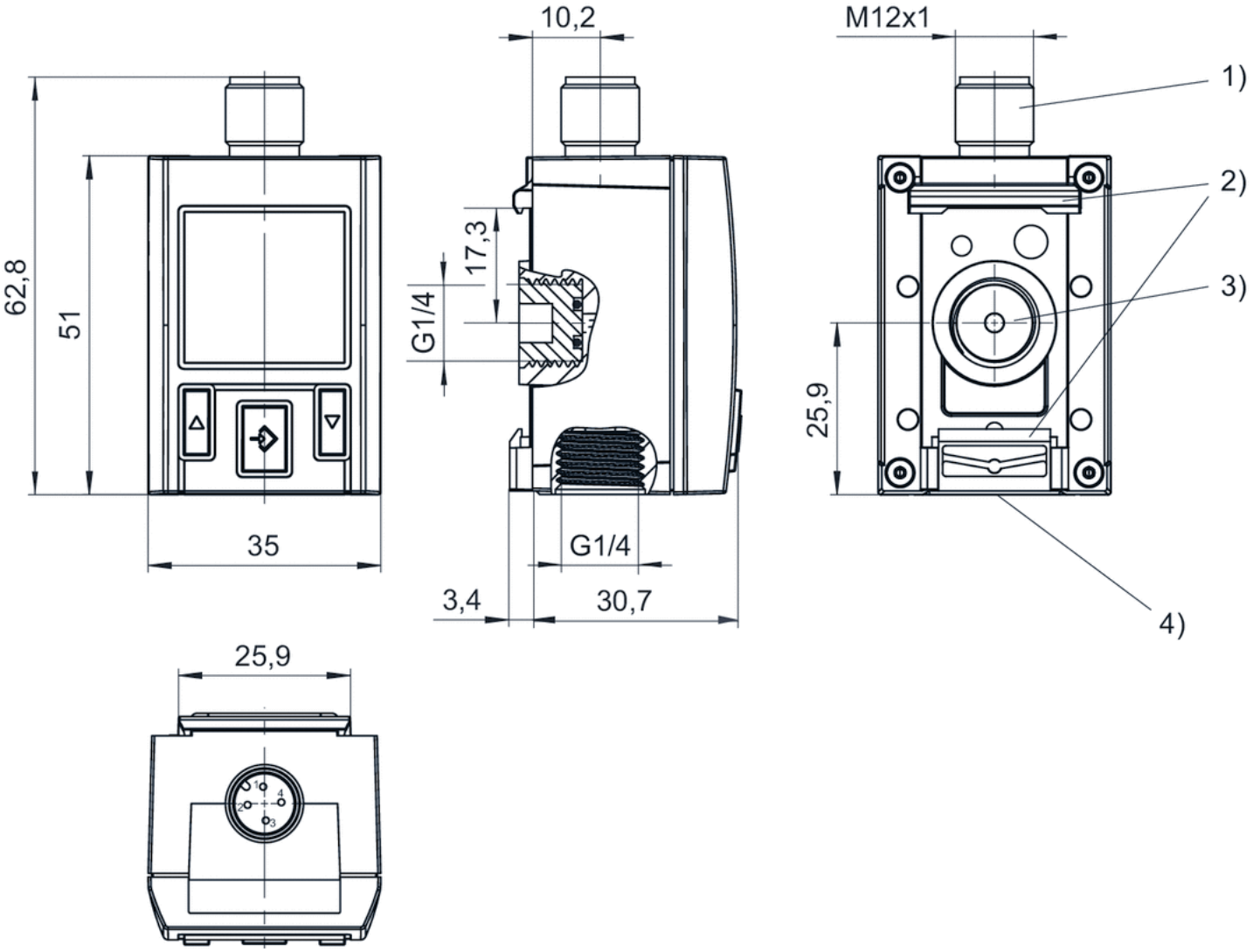

1) M12x1 electrical connection
2) Mounting for hat rail and wall mounting
3) Alternative pressure connection (G1/4) closed with plug
4) Pressure connection G1/4

Fig. 2

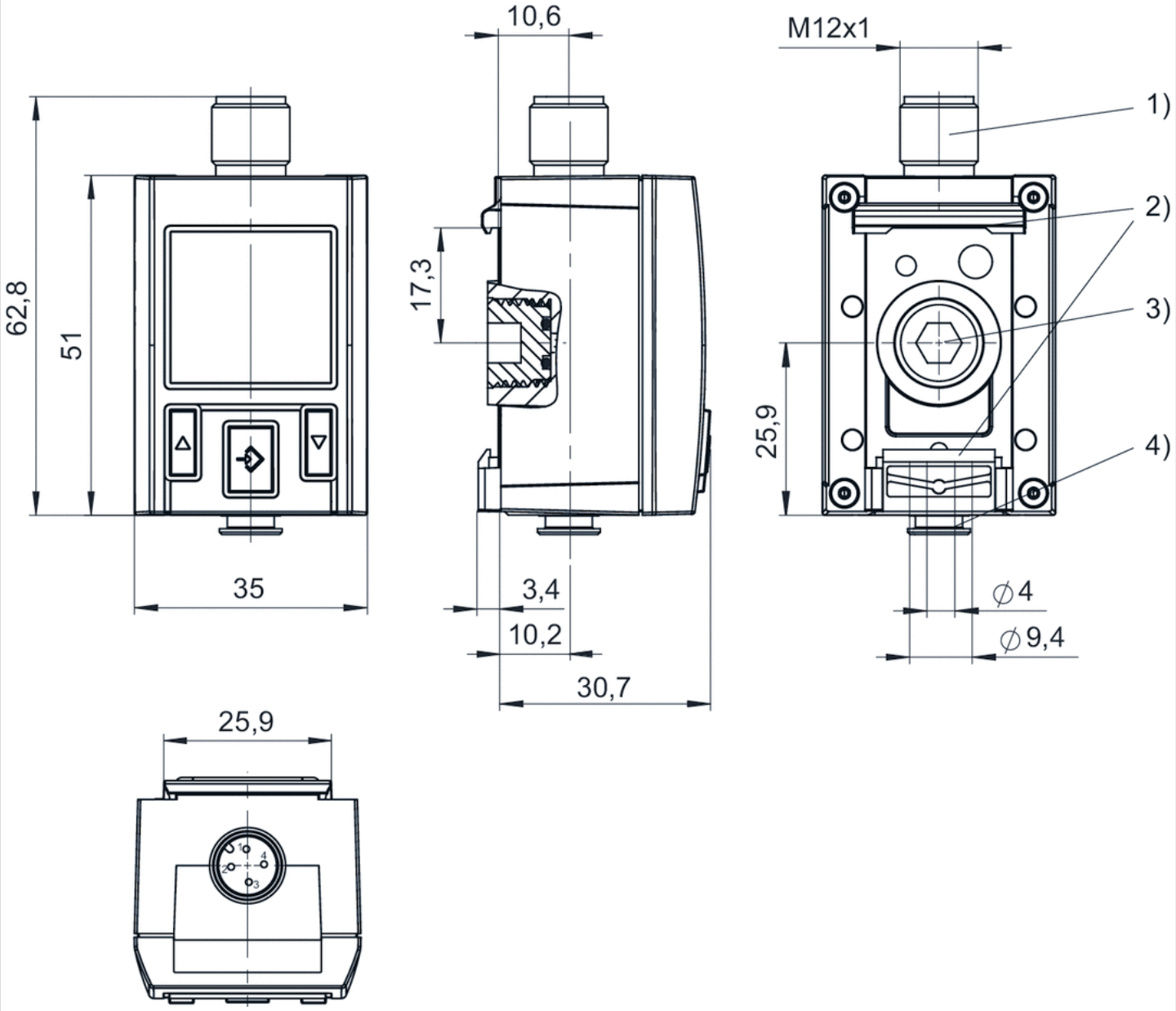

1) M12x1 electrical connection
2) Mounting for hat rail and wall mounting
3) Alternative pressure connection (G1/4) closed with plug
4) Pressure connection, tubing Ø 4 mm

Fig. 3, Electr. connection for leak test

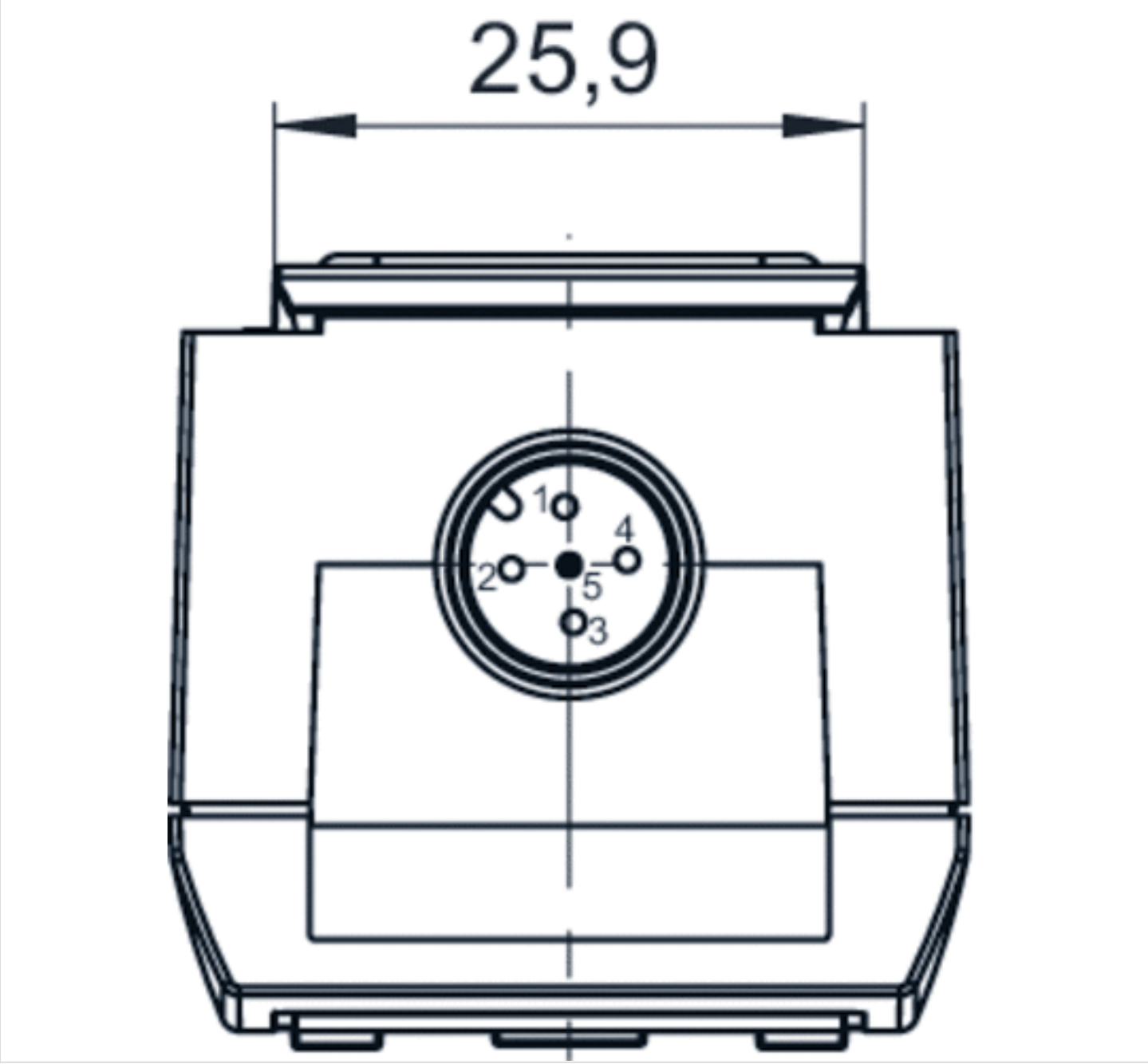

Display and operation area

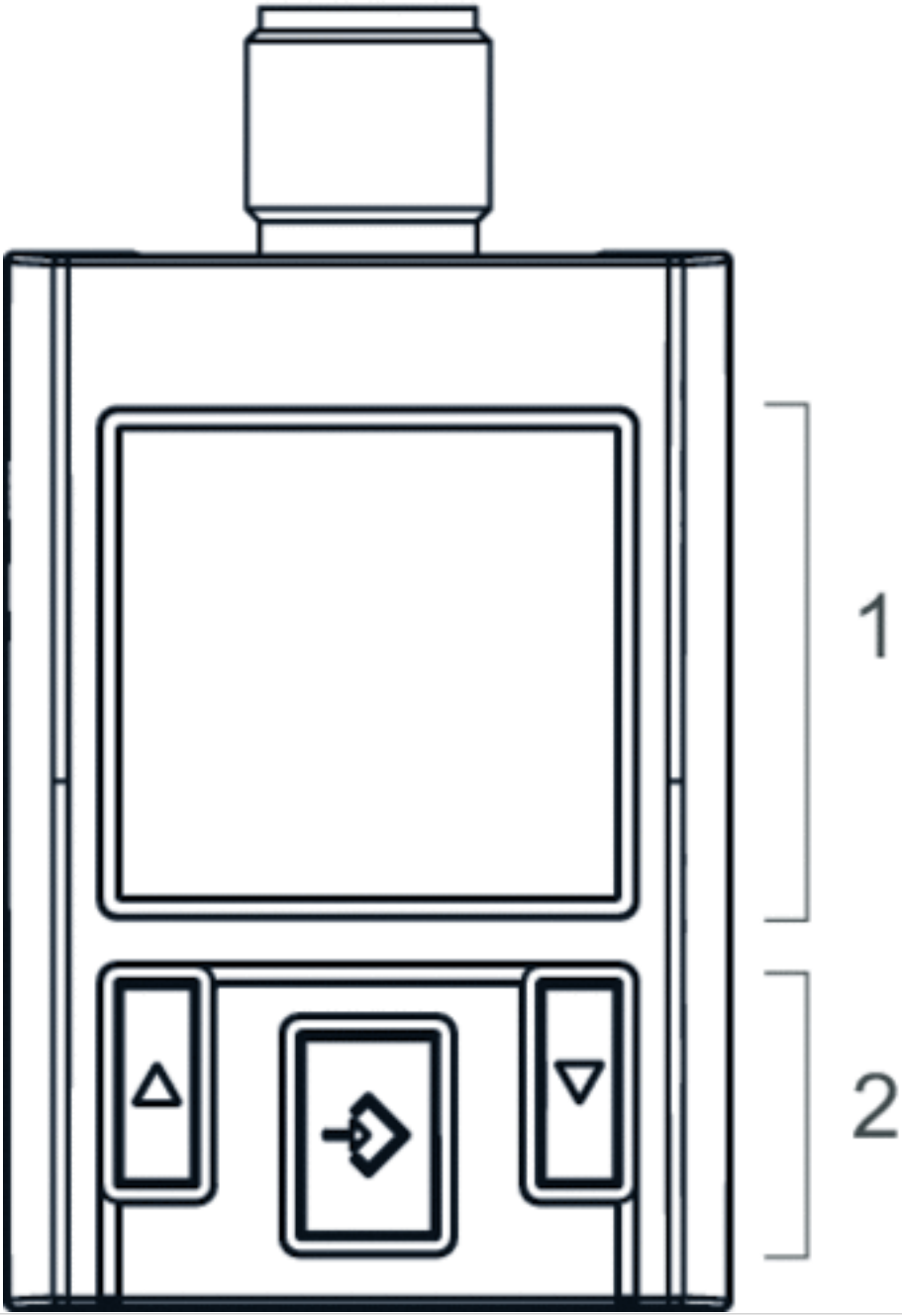

1) LCD display
2) Control panel with 3 buttons

Diagrams

Operating mode, PNP

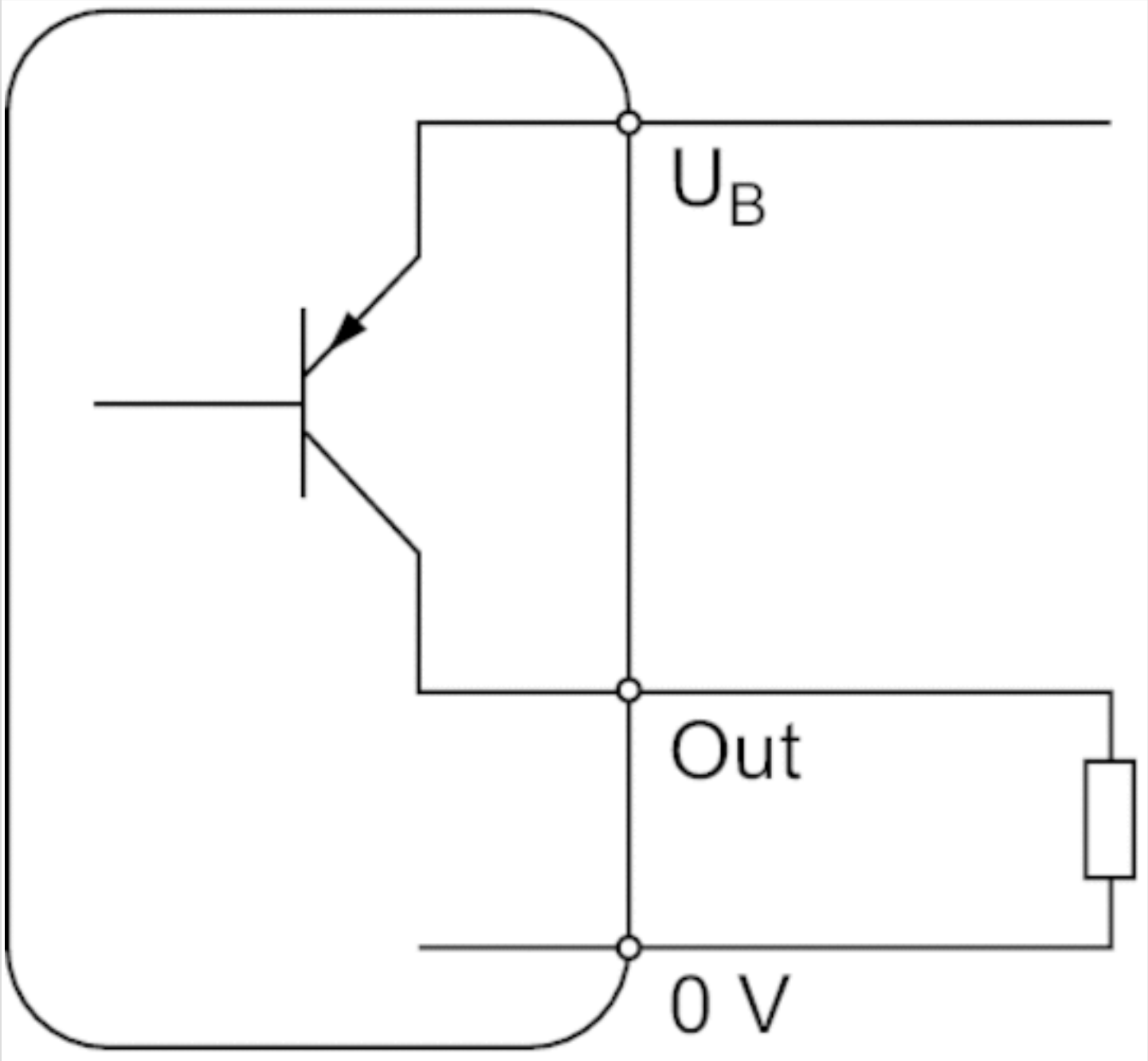

Operating mode, NPN

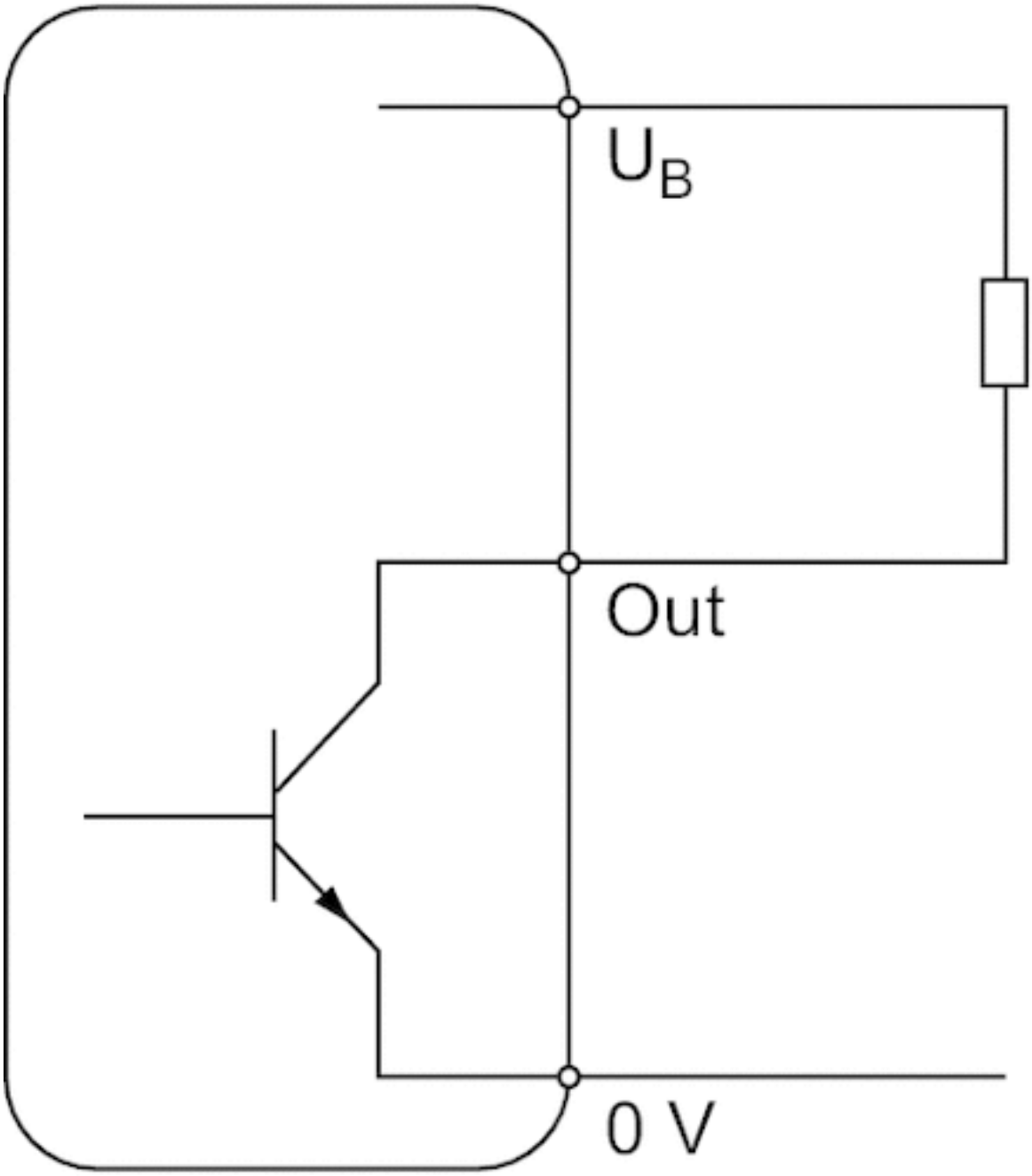

Operating mode, Push-pull

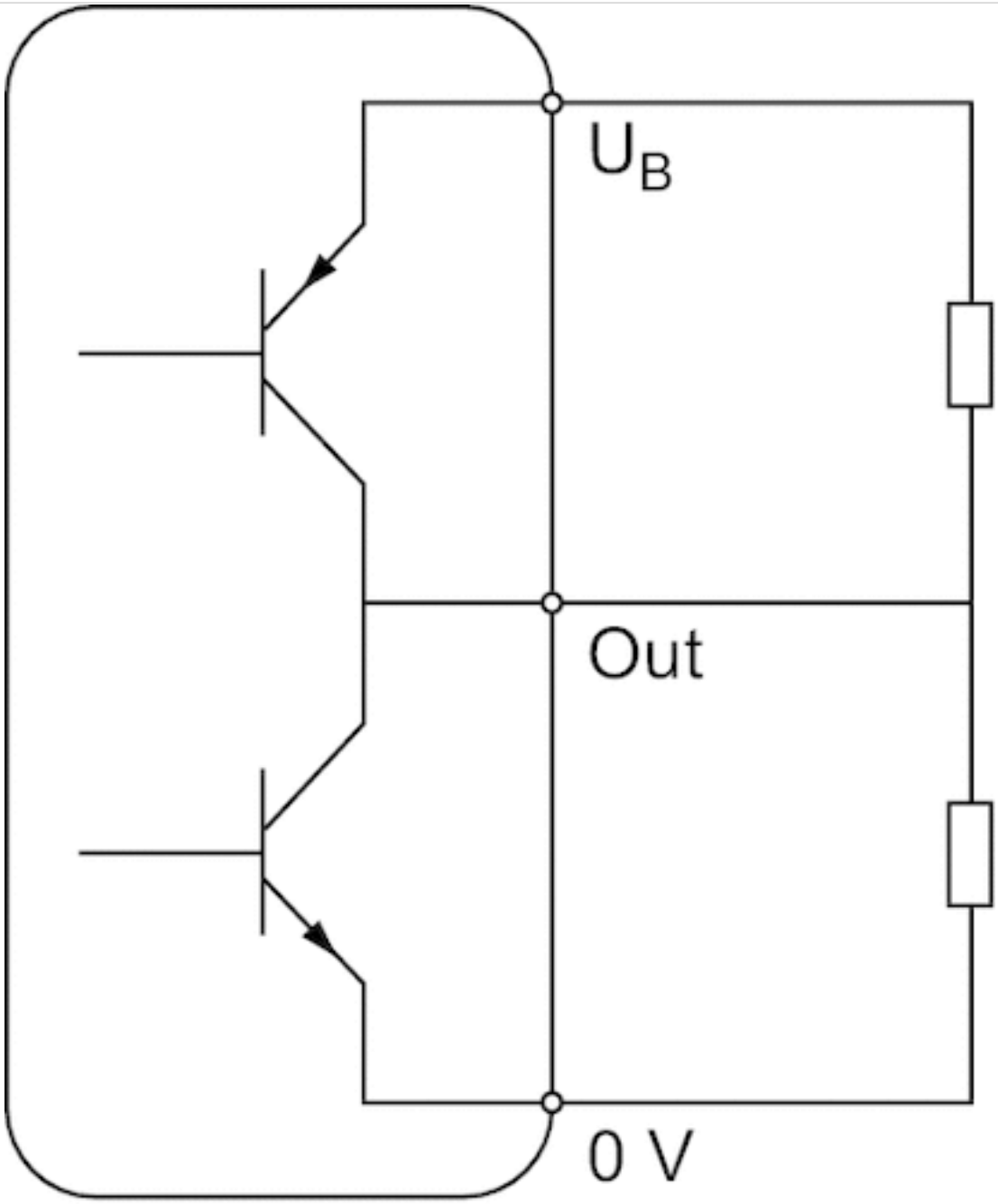

Hysteresis function: switching and resetting behavior dependent on pressure p and time t, in case of overpressure

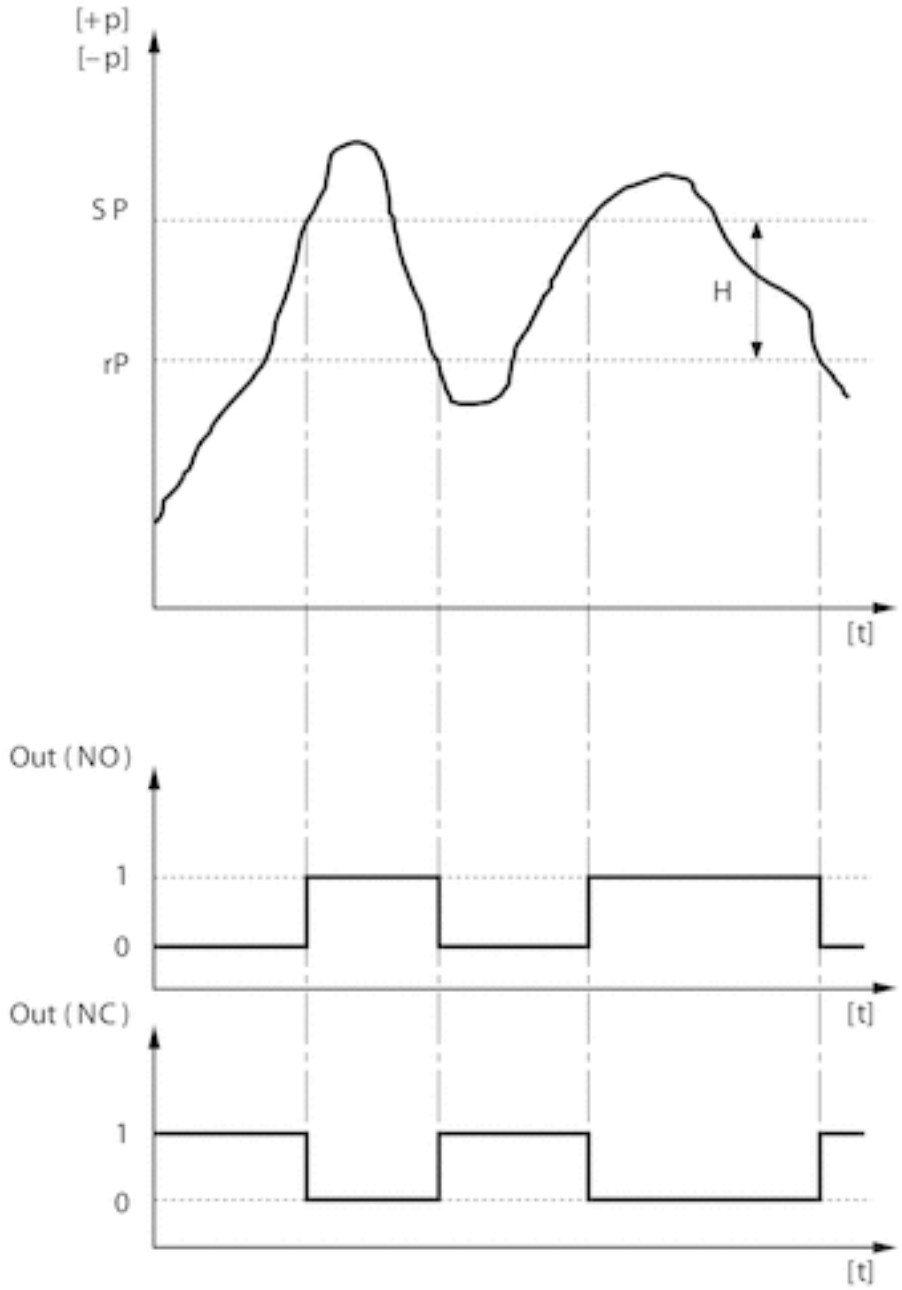

H: Hysteresis
SP = switching point
RP = resetting point
Out (NC): switch output, break contact
Out (NO): switch output, make contact

Hysteresis function: switching and resetting behavior dependent on pressure p and time t, in case of underpressure

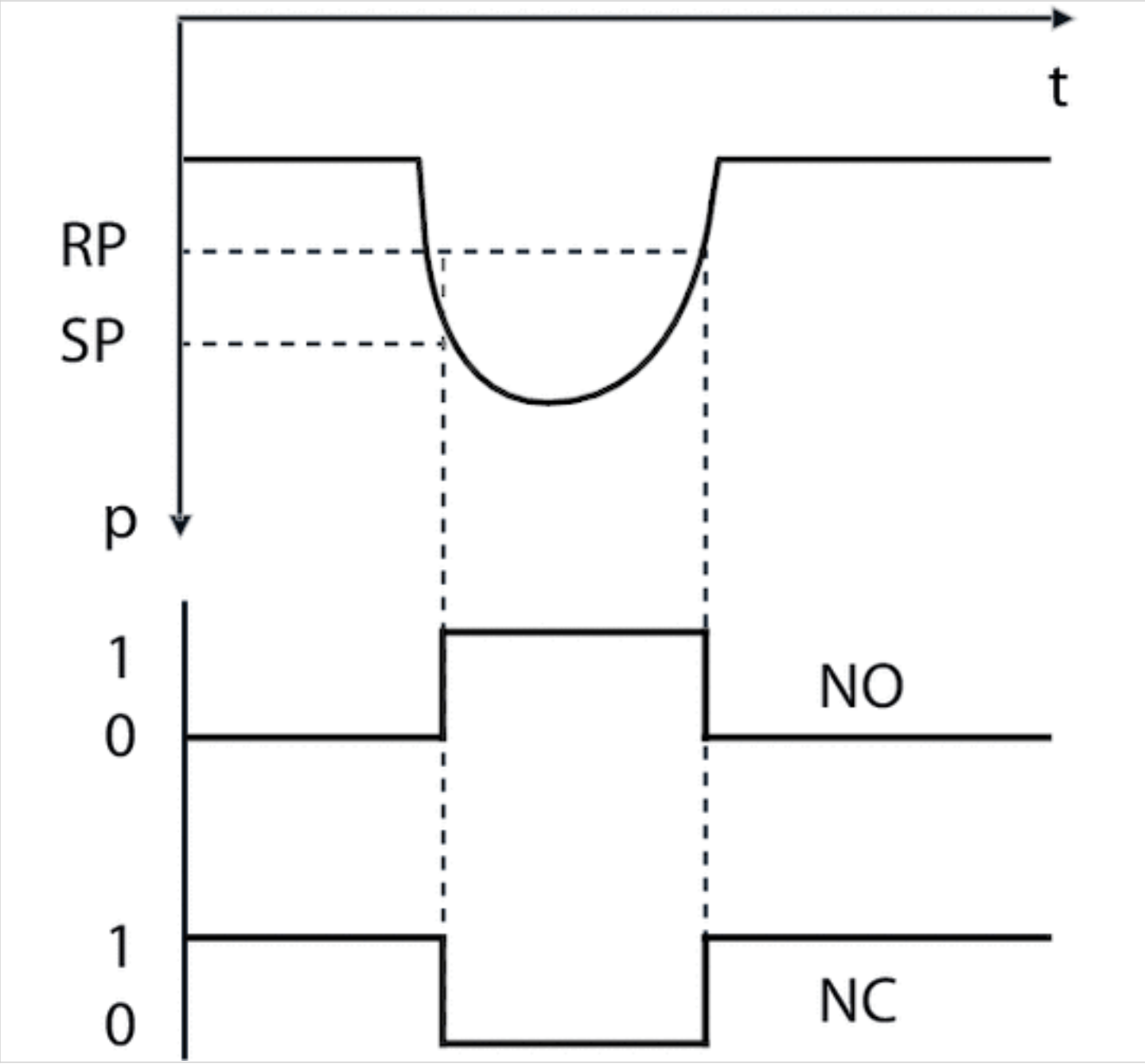

Delayed hysteresis function: switching and resetting behavior depending on pressure p and time t

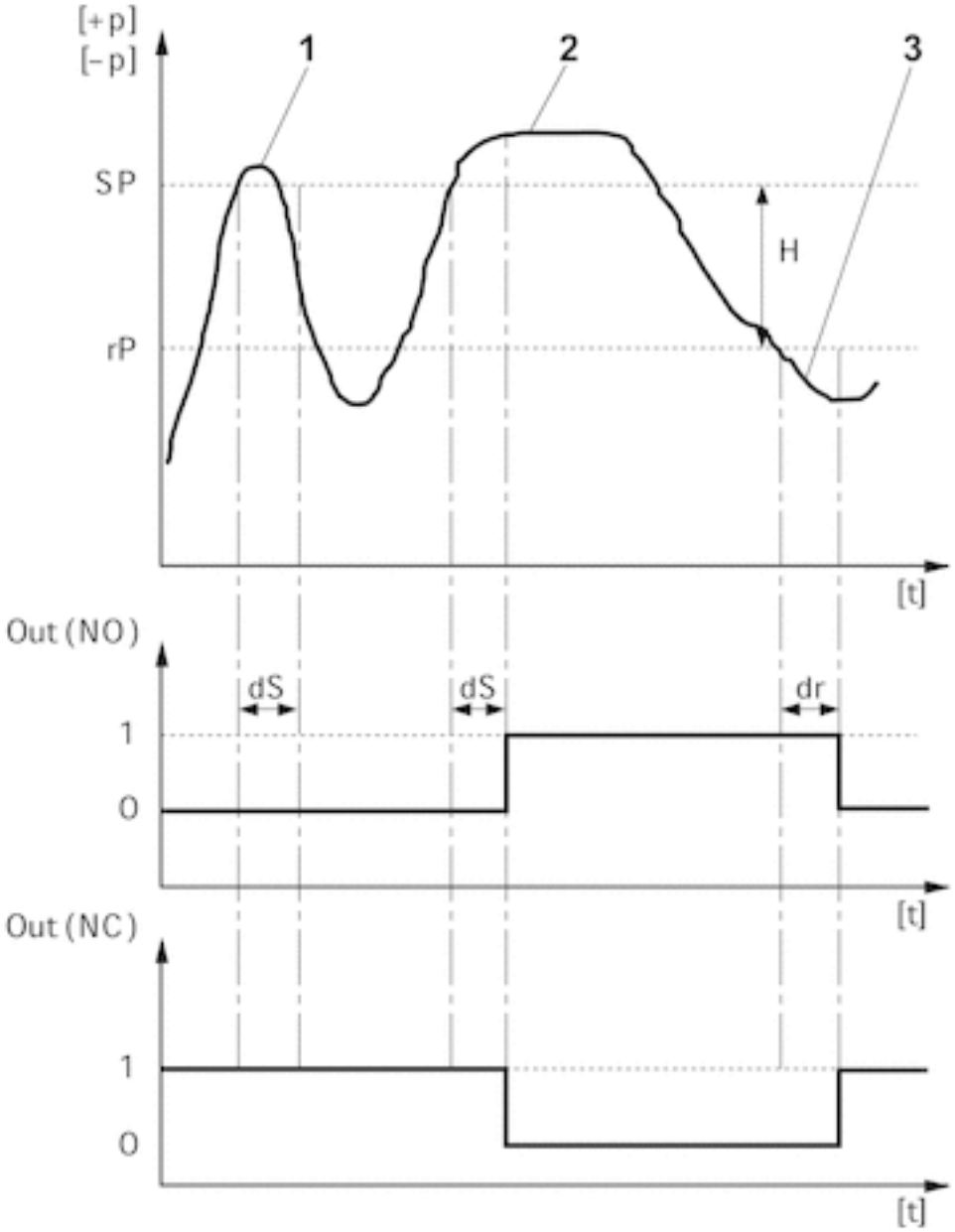

H: Hysteresis
SP = switching point
RP = resetting point
Out (NC): switch output, break contact
Out (NO): switch output, make contact
dS: switching delay
dR = reset delay
1) period of pressure over the switching point dS: pressure sensor does not switch
2) Period of pressure over the switching point > dS: pressure sensor switches
3) Period of pressure under the resetting point > dR: pressure sensor switches

Window function: switching and resetting behavior depending on pressure p and time t

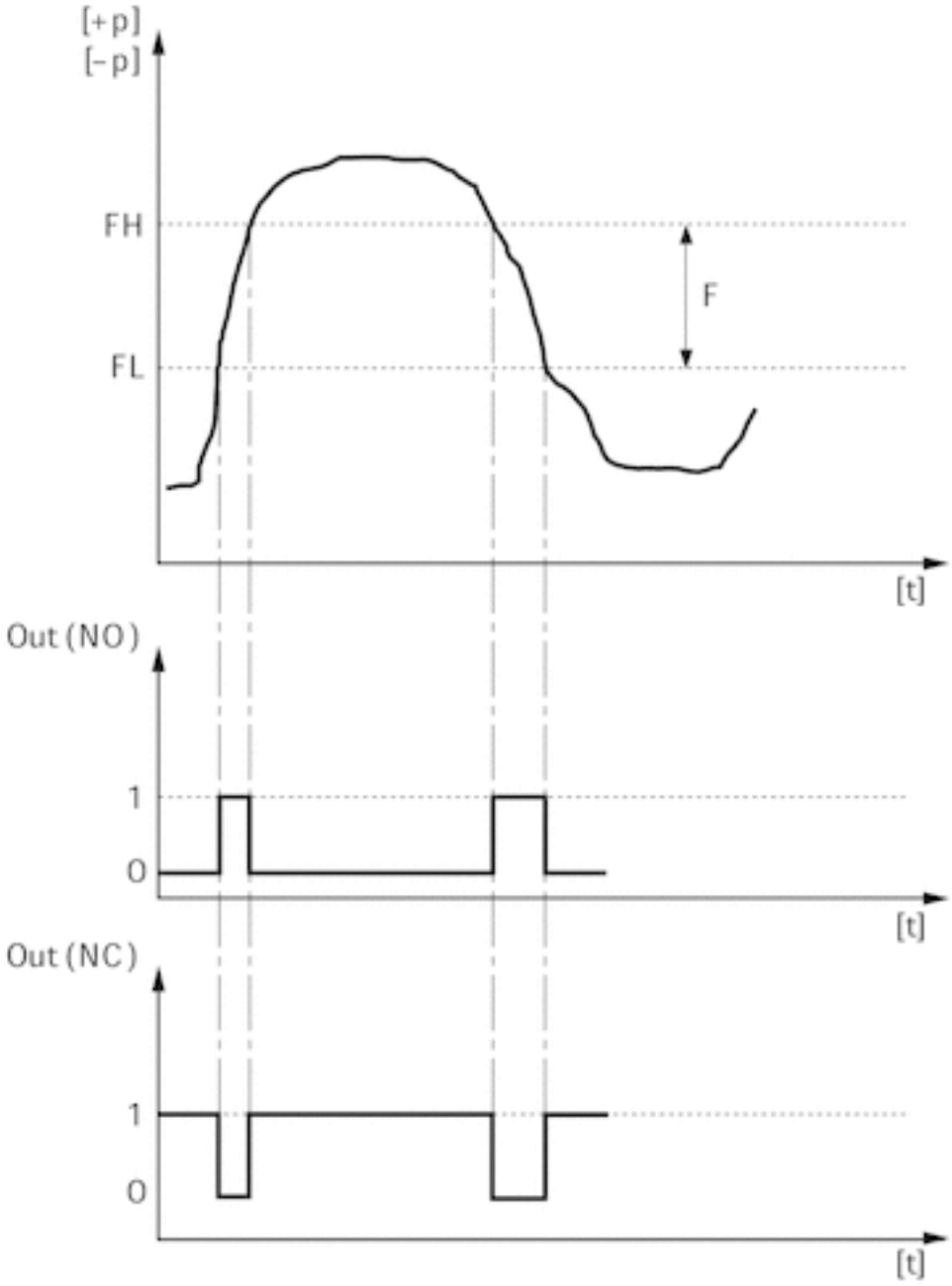

FH: pressure band, upper value
FL: pressure band, lower value
Out (NC): switch output, break contact
Out (NO): switch output, make contact

Leakage characteristic

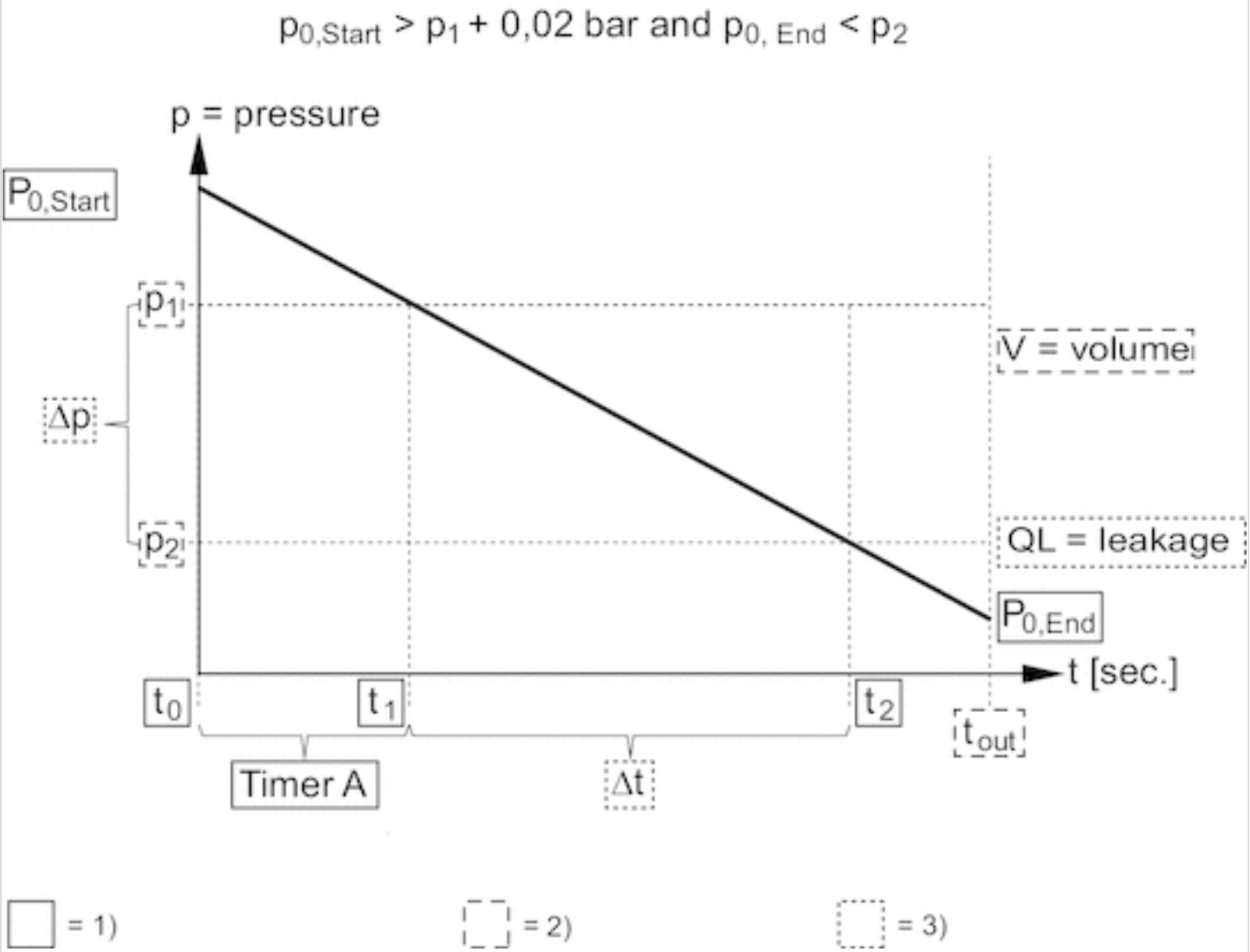

1) Internally stored parameter
2) Adjustable parameter
3) Output value

Circuit diagram

Block diagram, 1x PNP and 1x analog

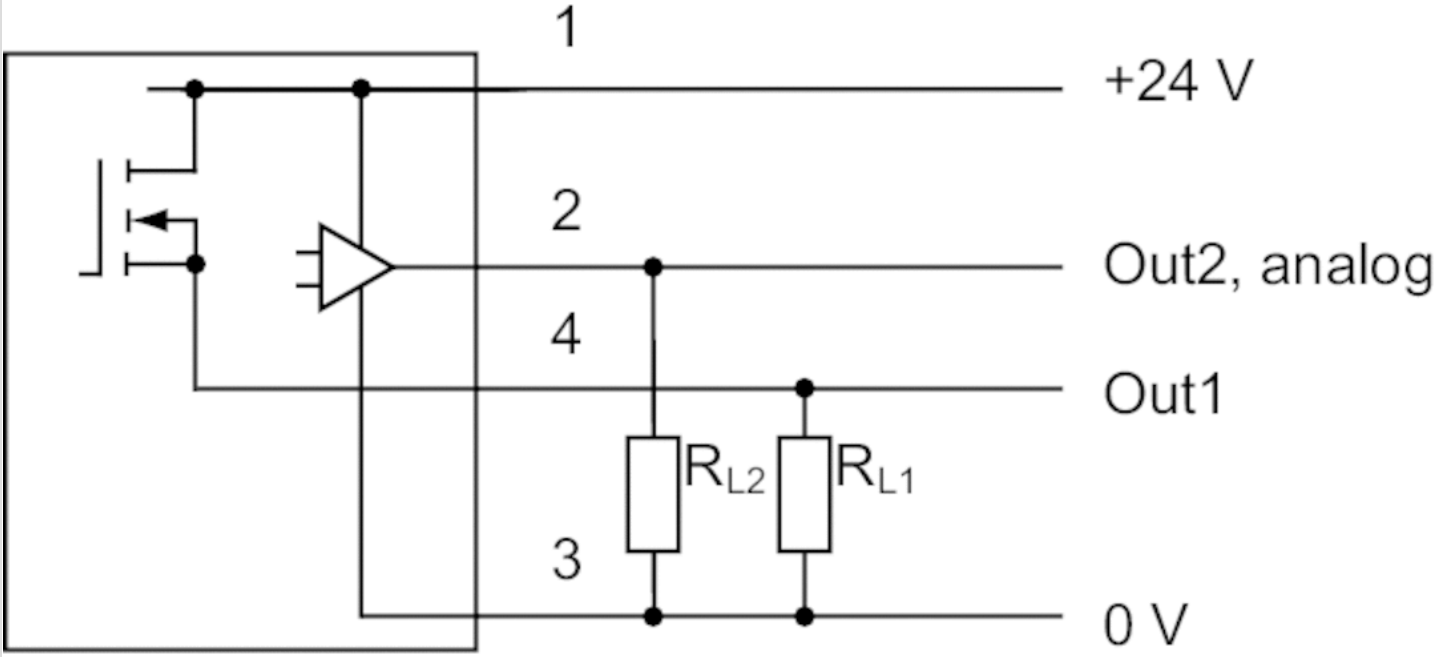

RL = storable postion

Block diagram, 1x NPN and 1x analog

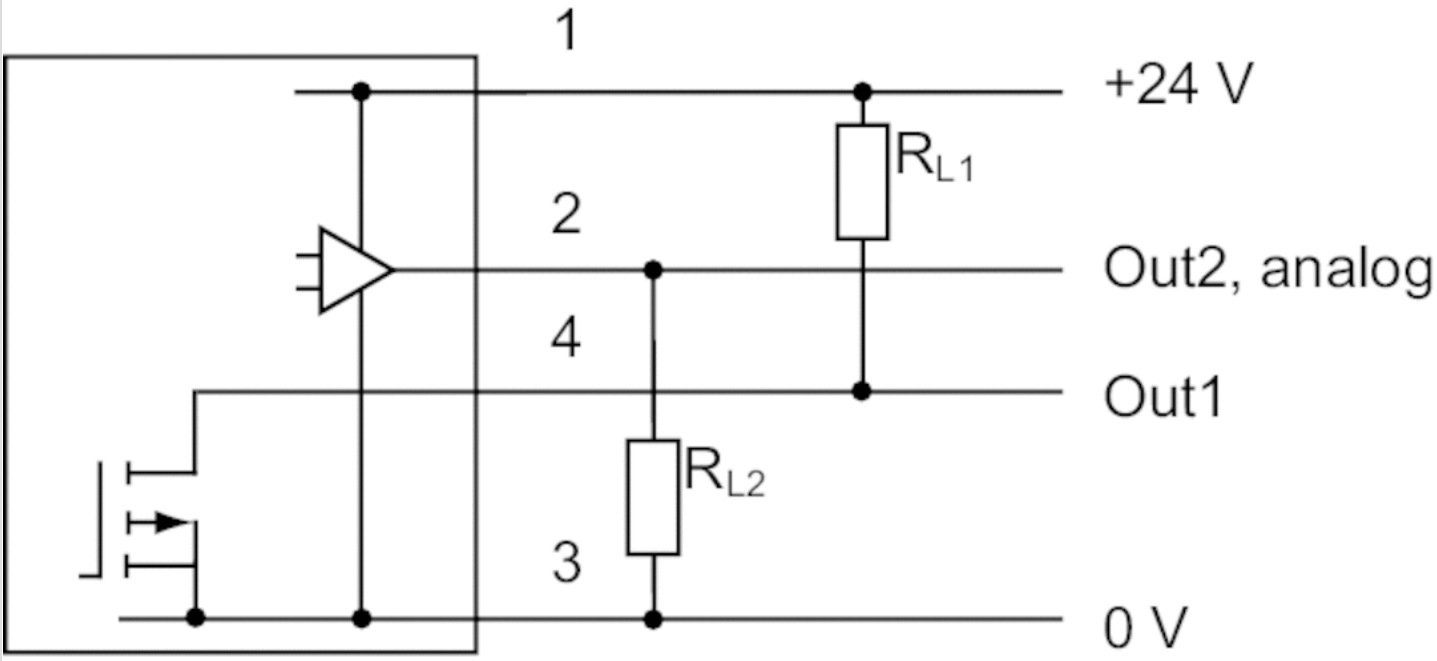

RL = storable postion

Pin assignments

Pin assignments, M12x1, 4-pin

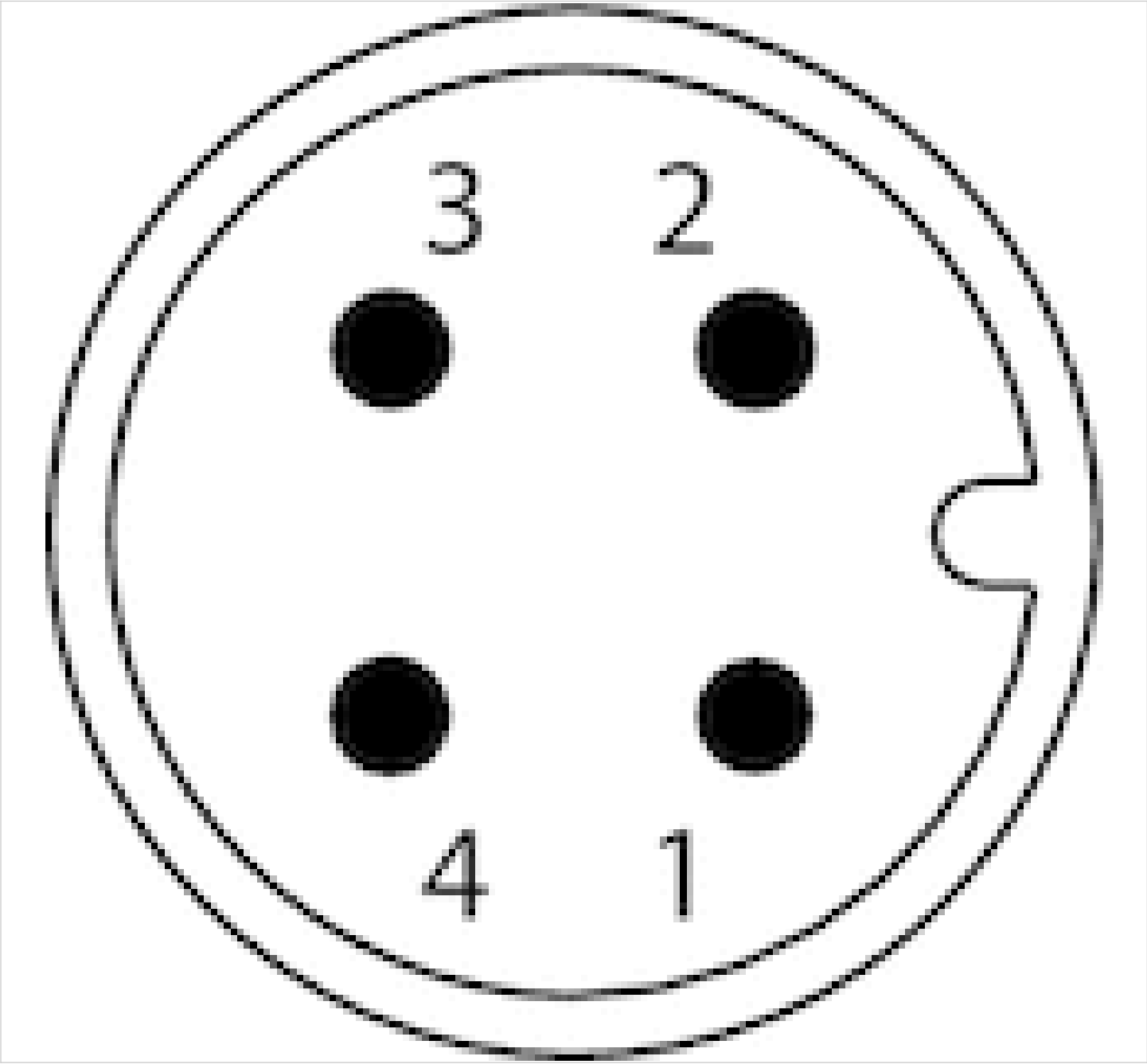

Pin	1
Allocation	operational voltage + UB

2	3
switch output Out2, analog: A or V, digital: PNP, NPN, push-pull	0 V

4
switch output Out1, digital: PNP, NPN, push-pull

Pin assignments

Pin assignments, M12x1, 5-pin

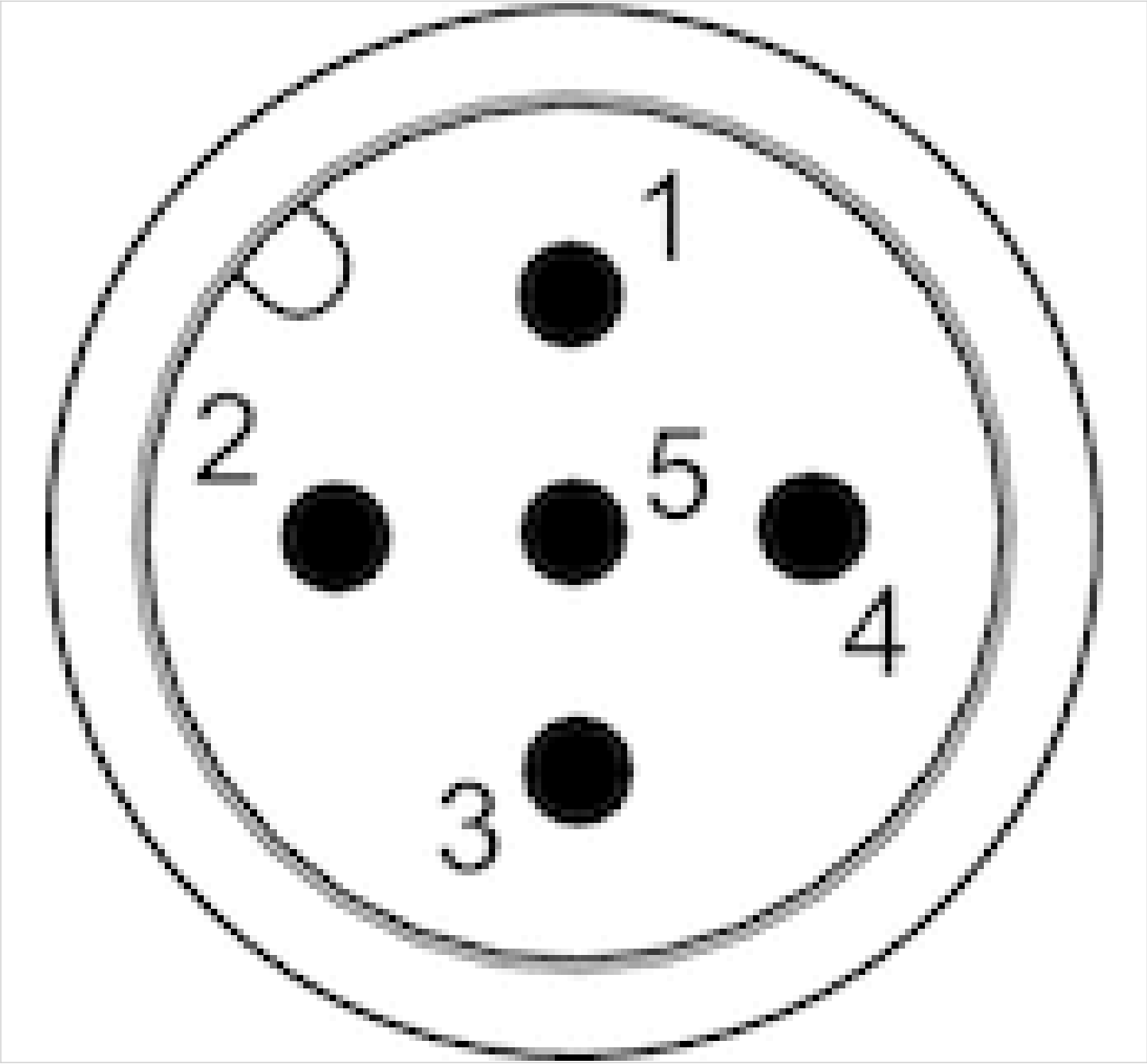

Pin	1	2	3
Allocation	Supply Voltage	Switch output PNP/NPN/push-pull, switchable	0 V

4
Switch output PNP/NPN/push-pull/leakage mode, digital switch input PNP

5
Analog output (0 to 10 V DC, 4 to 20 mA)

Efficient pneumatic solutions, our program: cylinders and drives, valves and valve systems, air supply management

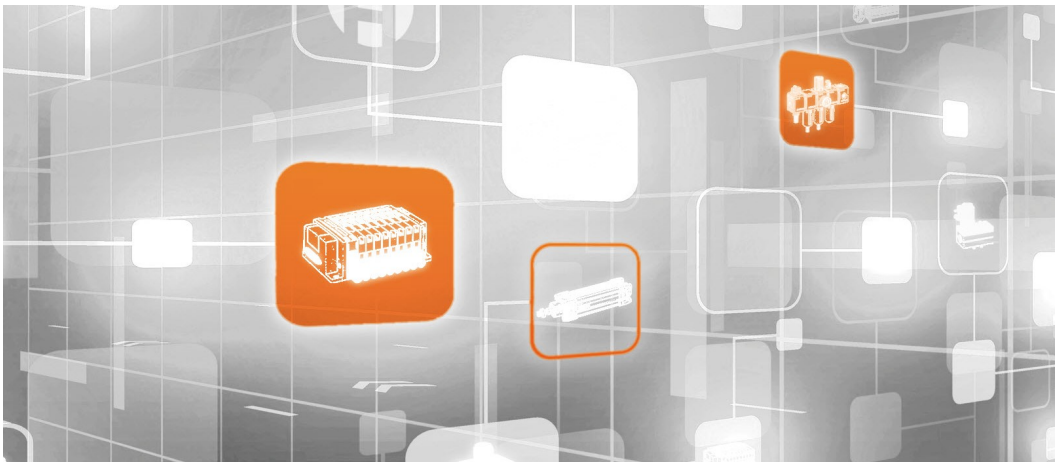

Visit us: Emerson.com/Aventics

Your local contact: Emerson.com/contactus

Emerson.com

Facebook.com/EmersonAutomationSolutions

LinkedIn.com/company/Emerson-Automation-Solutions

Twitter.com/EMR_Automation

2020-12

EMERSON

CONSIDER IT SOLVED™